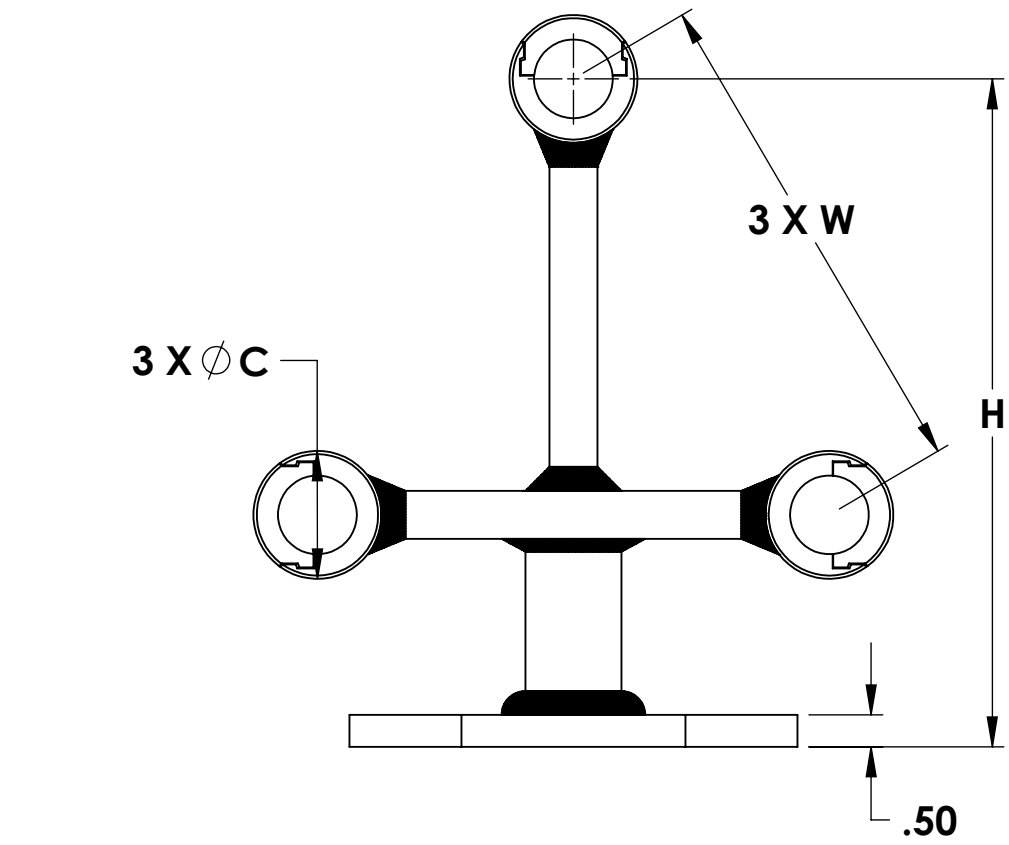

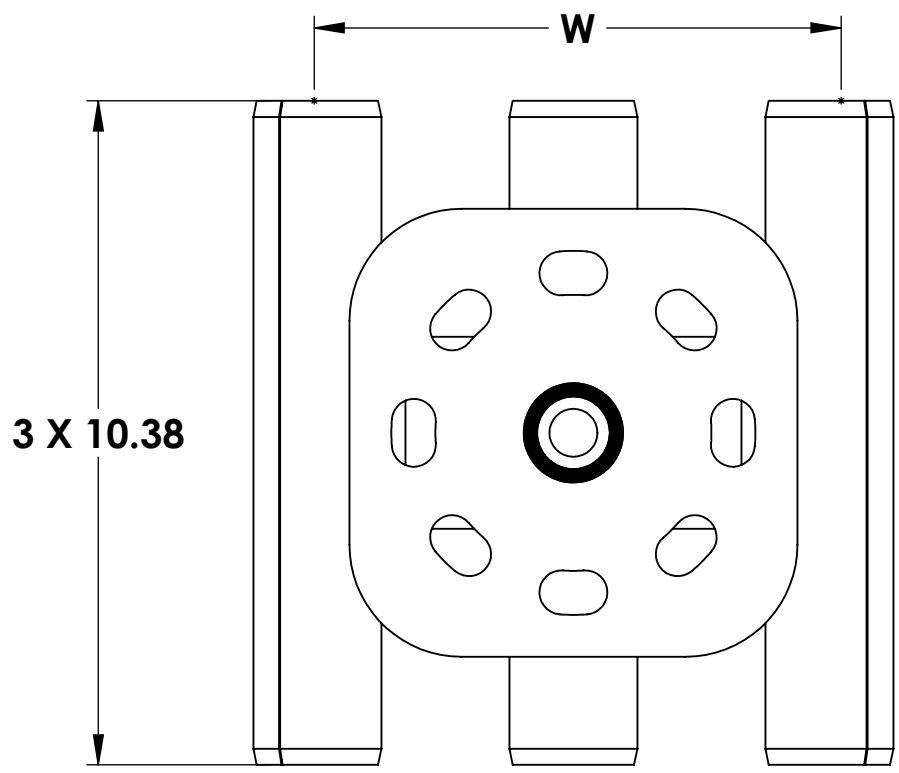

TABLE: AVAILABLE OPTIONS			
ASSEMBLY PART NUMBER	∅C	W	H
CL453D10335E2-8	2.00	8.00	10.55

LEGEND

CL453 D XXXXX XX XX X

- FINISH: "S"= NONE (BARE)
  "T" = TIN PLATE
- OPTIONAL SPACING
- BOLT CIRCLE OPTION
- IDENTIFIER NUMBER
- MATERIAL CODE "D"= ALUM
- BASIC PART NUMBER

THIS DRAWING AND THE INFORMATION CONTAINED HEREIN ARE THE PROPERTY OF DMCPower AND SHALL NOT BE COPIED, REPRODUCED OR DISCLOSED WITHOUT EXPRESS AUTHORIZATION BY DMCPower.

DMCPOWER
Next Generation Power Connections
623 EAST ARTESIA BOULEVARD, CARSON, CA 90746

TITLE
TRIFURCATING CABLE SPACER BUS SUPPORT

DWG NO **CL453**

SIZE	FSCM NO	
B	14798	SHEET 1 OF 1